LS8770,1,3,4,5,6,7,8,9CTL,CTLAB,CTLMBBB,CTLBBMB
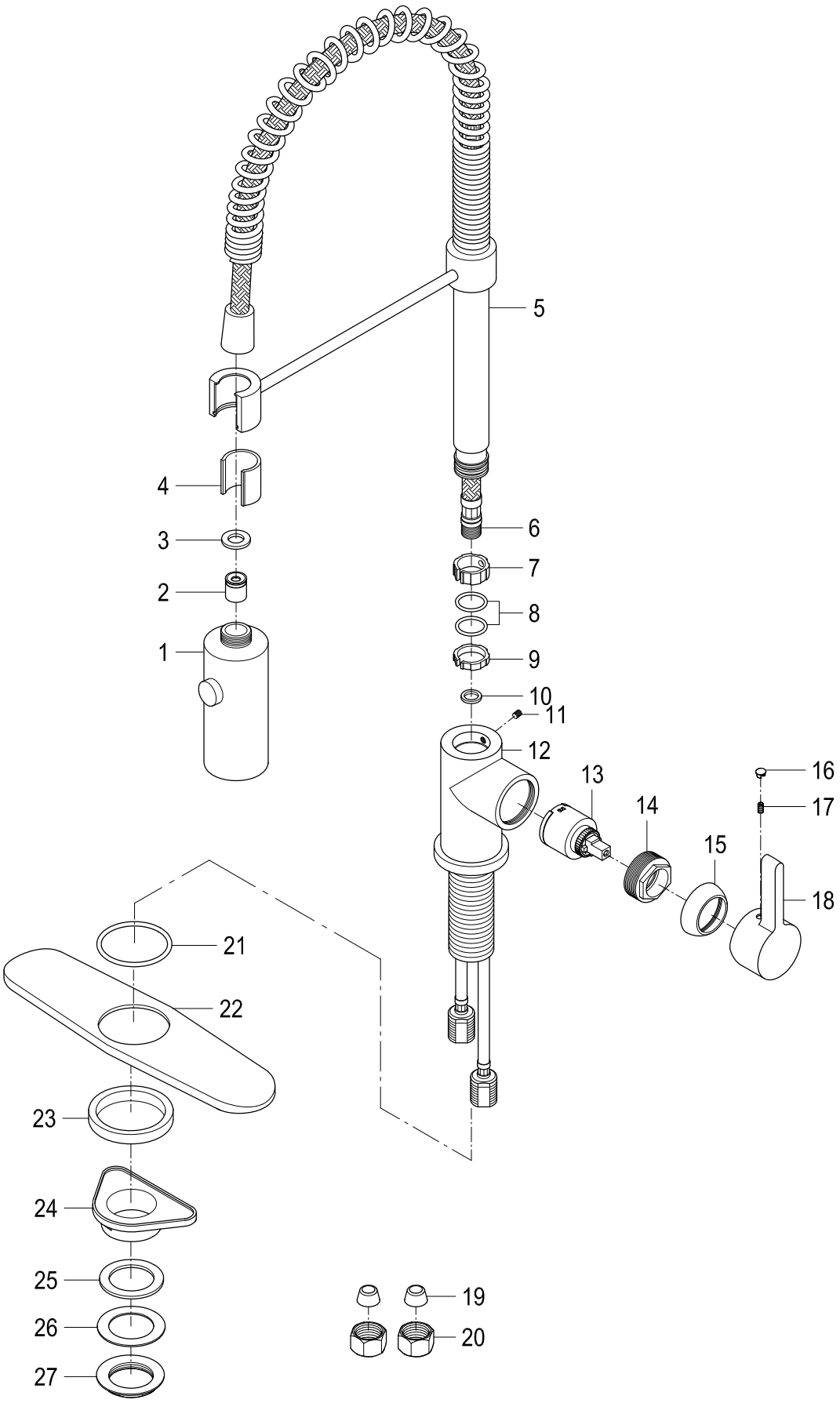
Single Handle Pull-Down Kitchen Faucet